الكلية الجامعية للعلوم التطبيقية
University College of Applied Sciences
Leader of Innovation رائـــــدة الإبـــــداع

University College of Applied Sciences

(Data Science and Artificial Intelligence)

Student Name:	ID:
Salma Talat Shaheen	220210654

Embedded Systems Lab – Final Project

Smart Medication Reminder

11 March 2026

1. Introduction

MMedication non-adherence is a major challenge in healthcare. This project develops an **Arduino-based Smart Medicine Dispenser** to automate medication schedules. The system utilizes a multi-mode interface and electro-mechanical actuation (Servo) to eliminate human error, ensuring patients receive precise doses at exact times for improved health outcomes.

Link of project at Github : [Smart Medication Reminder]

2. System Description

The system is built on an Arduino Uno and integrates the following:

- **A. Hardware Components:**
  - **LCD (16x2):** Displays real-time feedback and navigation menus.
  - **Input (4 Buttons):** Tactile interface for Mode selection and Time adjustment.
  - **Actuators:** SG90 Servo (Dispensing gate) and Bicolor LEDs (Visual alerts).
- **B. Multi-Mode Architecture (FSM):**
  - **Mode 0:** Standby.
  - **Mode 1:** Set Alarm Time (Hours/Minutes).
  - **Mode 2:** Set Current Time.
  - **Mode 3:** Ready Confirmation.
  - **Mode 4:** Active Clock & Trigger Monitoring.
- **C. Logical Constraints:**
  - **Math Constraints:** Modulo arithmetic (24h/60m) for time boundaries.
  - **Display Stability:** Absolute cursor positioning to prevent LCD character overflow.
  - **Confirmation:** Alarm resets only upon pressing the "Action" button.

3. Circuit Diagram

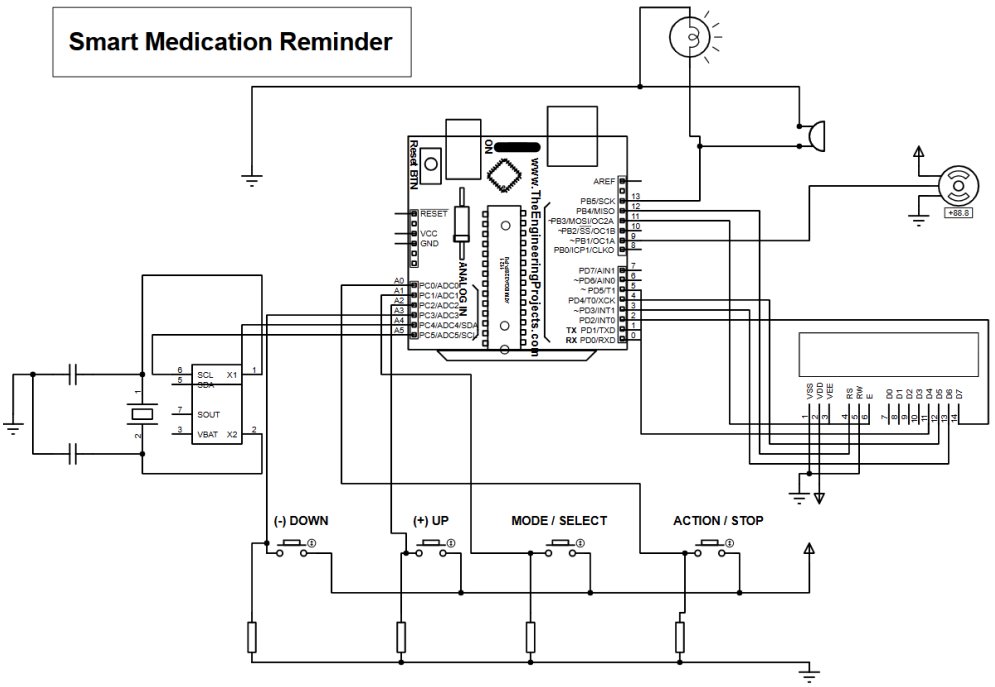

4.Flowchart

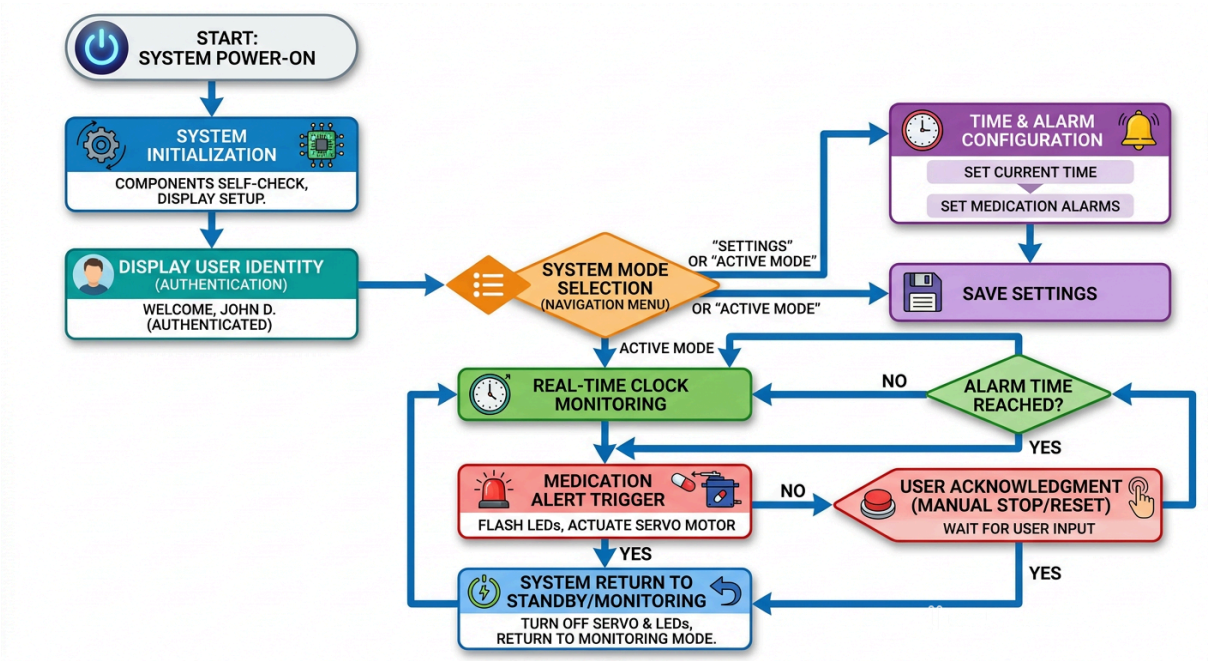

5.Code

```
/* * Project Name: Smart Medicine Dispenser & Reminder
 * Developer: Salma T. S. Shaheen | 220210654
 */

#include <LiquidCrystal.h>
#include <Wire.h>
#include <Servo.h>

// LCD Connections
const int rs = 12, en = 11, d4 = 5, d5 = 4, d6 = 3, d7 = 2;
LiquidCrystal lcd(rs, en, d4, d5, d6, d7);
Servo pillServo;

// Pin Definitions
const int colorA = 13;
const int colorB = 8;
const int actionPin = A0;
const int modePin = A1;
const int UP = A2;
const int DOWN = A3;
const int servoPin = 9;

// Time Variables
int h = 8, m = 1, s = 0;
int alertHH = 8, alertMM = 2;

// System States
int systemMode = 0;
bool isAlerting = false;
bool alertDone = false;
unsigned long lastTick = 0;

// Sub-mode Logic
bool isTypeSelected = false;
```

```
    if (digitalRead(UP) == HIGH) {
      selectedType = 1; isTypeSelected = true; lcd.clear();
delay(300);
    }
    if (digitalRead(DOWN) == HIGH) {
      selectedType = 2; isTypeSelected = true; lcd.clear();
delay(300);
    }
  }
  else {
    lcd.setCursor(0, 0);
    lcd.print(title);

    // Adjustment Logic
    if (digitalRead(UP) == HIGH) {
      if (selectedType == 1) hourVar = (hourVar + 1) % 24;
      else minVar = (minVar + 1) % 60;
      delay(100);
    }
    if (digitalRead(DOWN) == HIGH) {
      if (selectedType == 1) hourVar = (hourVar + 23) % 24;
      else minVar = (minVar + 59) % 60;
      delay(100);
    }

    // --- CRITICAL FIX: Absolute Positioning ---
    // Hours Section (Column 0 to 5)
    lcd.setCursor(0, 1);
    if (selectedType == 1) lcd.print(">H:"); else lcd.print(" H:");
    printDigits(hourVar);

    // Mid Space (Column 6 to 8)
    lcd.print("   ");
```

```
int selectedType = 0; // 1: Hours, 2: Minutes

void setup() {
  lcd.begin(16, 2);
  pillServo.attach(servoPin);
  pillServo.write(0);

  pinMode(colorA, OUTPUT);
  pinMode(colorB, OUTPUT);
  pinMode(actionPin, INPUT);
  pinMode(modePin, INPUT);
  pinMode(UP, INPUT);
  pinMode(DOWN, INPUT);

  // Identity Screens (600ms)
  lcd.setCursor(0, 0); lcd.print("SALMA SHAHEEN");
  lcd.setCursor(0, 1); lcd.print("220210654");
  delay(600); lcd.clear();
}

void loop() {
  // Mode Change Logic
  if (digitalRead(modePin) == HIGH && systemMode != 4)
{
    systemMode++;
    if (systemMode > 3) systemMode = 1;
    isTypeSelected = false;
    selectedType = 0;
    lcd.clear();
    delay(250);
  }

  // Start Mode 4 Logic
  if (digitalRead(actionPin) == HIGH && systemMode ==
3) {
    systemMode = 4;
    lcd.clear();
    lcd.print("M4: STARTING...");
    delay(600);
    lcd.clear();
  }

  switch (systemMode) {
    case 0:
      lcd.setCursor(0, 0); lcd.print("MODE 0: STANDBY");
      lcd.setCursor(0, 1); lcd.print("Press MODE Key");
      break;
    case 1: handleSetting(alertHH, alertMM, "M1: SET
ALARM"); break;
    case 2: handleSetting(h, m, "M2: SET TIME"); break;
    case 3:
      lcd.setCursor(0, 0); lcd.print("MODE 3: READY?");
      lcd.setCursor(0, 1); lcd.print("PRESS ACTION...");
      break;
    case 4: runClockMode4(); break;
  }
}
// Fixed Adjustment Function with Precise Cursor Control
void handleSetting(int &hourVar, int &minVar, String title) {
  if (!isTypeSelected) {
    lcd.setCursor(0, 0);
    lcd.print(title);
    lcd.setCursor(0, 1);
    lcd.print("UP:HRS | DN:MIN");
    // Minutes Section (Column 9 to 14)
    lcd.setCursor(9, 1);
    if (selectedType == 2) lcd.print(">M:"); else lcd.print(" M:");
    printDigits(minVar);
  }
}

void runClockMode4() {
  if (millis() - lastTick > 200) {
    lastTick = millis();
    s++;
    if (s >= 60) { s = 0; m++; }
    if (m >= 60) { m = 0; h++; }
    if (h >= 24) h = 0;

    lcd.setCursor(0, 0);
    lcd.print("M4: ");
    printDigits(h); lcd.print(":"); printDigits(m); lcd.print(":");
printDigits(s);

    if (!isAlerting) {
      digitalWrite(colorA, LOW); digitalWrite(colorB, LOW);
      lcd.setCursor(0, 1);
      if (s % 10 < 5) {
        lcd.print("ALARM: "); printDigits(alertHH); lcd.print(":");
printDigits(alertMM);
      } else {
        lcd.print("Get Well, Salma!");
      }
    }

    if (h == alertHH && m == alertMM && !alertDone) isAlerting =
true;
    else if (m != alertMM) alertDone = false;
  }

  if (isAlerting) {
    pillServo.write(90);
    lcd.setCursor(0, 1);
    lcd.print(">> TAKE PILL! <<");
    if ((millis() / 200) % 2 == 0) {
      digitalWrite(colorA, HIGH); digitalWrite(colorB, LOW);
    } else {
      digitalWrite(colorA, LOW); digitalWrite(colorB, HIGH);
    }
  }

  if (digitalRead(actionPin) == HIGH && isAlerting) {
    isAlerting = false;
    alertDone = true;
    digitalWrite(colorA, LOW); digitalWrite(colorB, LOW);
    pillServo.write(0);
    lcd.setCursor(0, 1);
    lcd.print("  Well Done!    ");
    delay(1500);
    lcd.clear();
  }
}

void printDigits(int digits) {
  if (digits < 10) lcd.print('0');
  lcd.print(digits);
}
```

6.Screenshots

Circuit Diagram

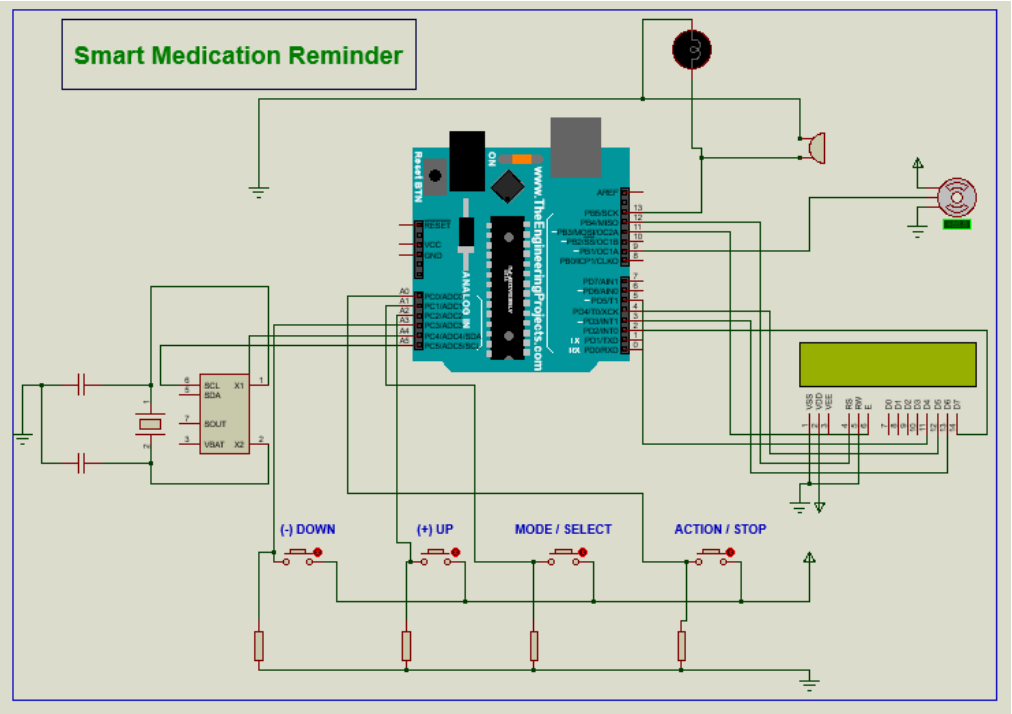

Student Name and ID

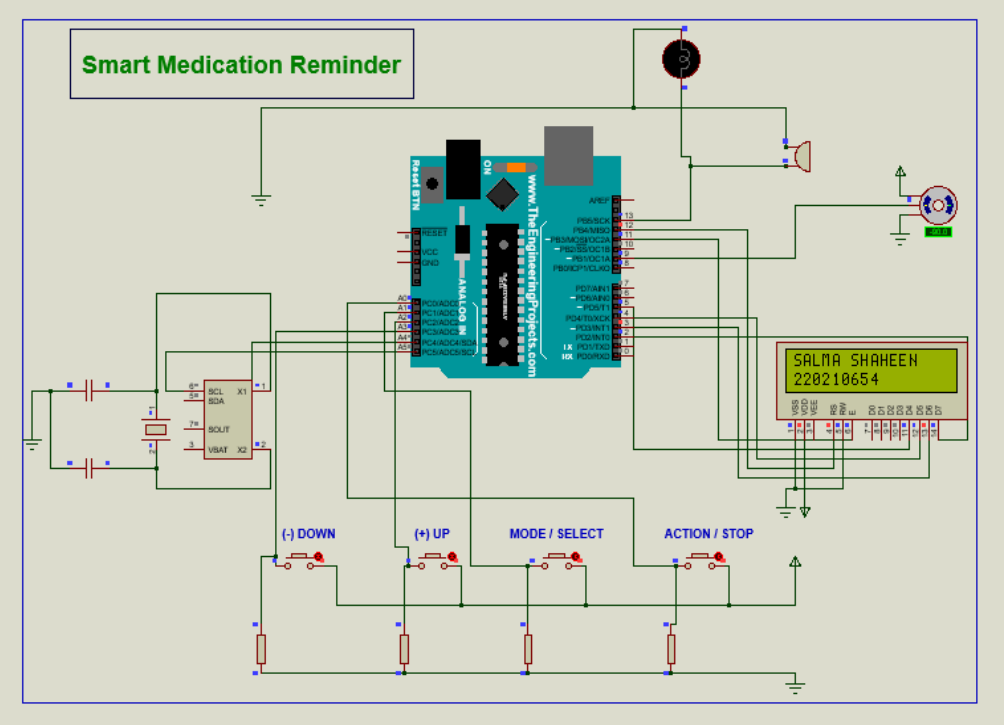

Mode 0: Standby

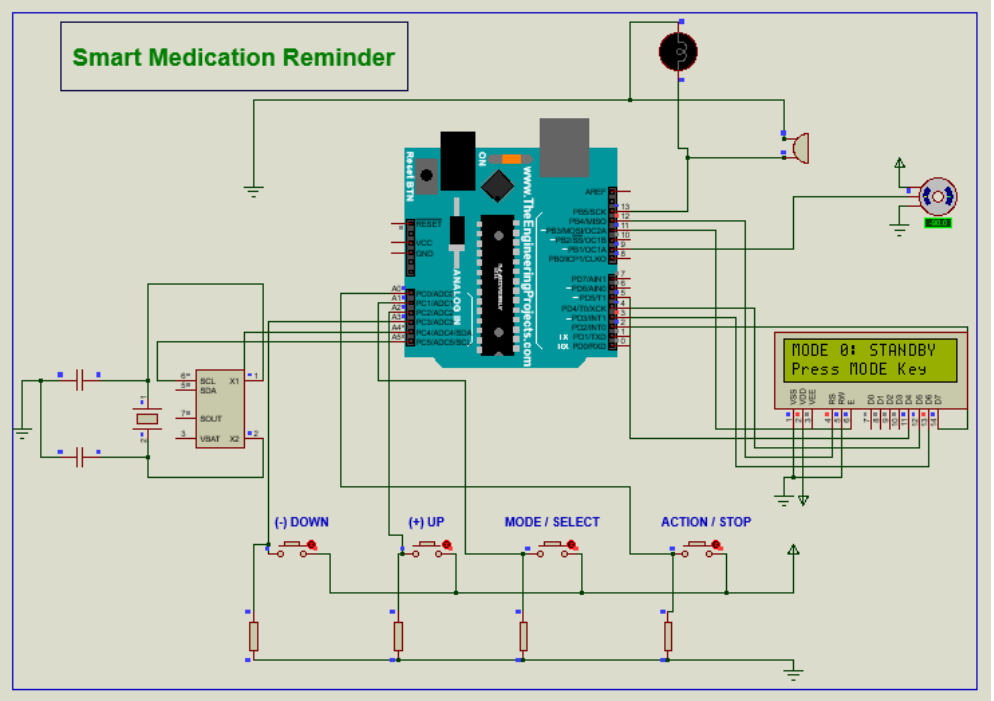

Mode 1: Set Alarm Time (Hours/Minutes).

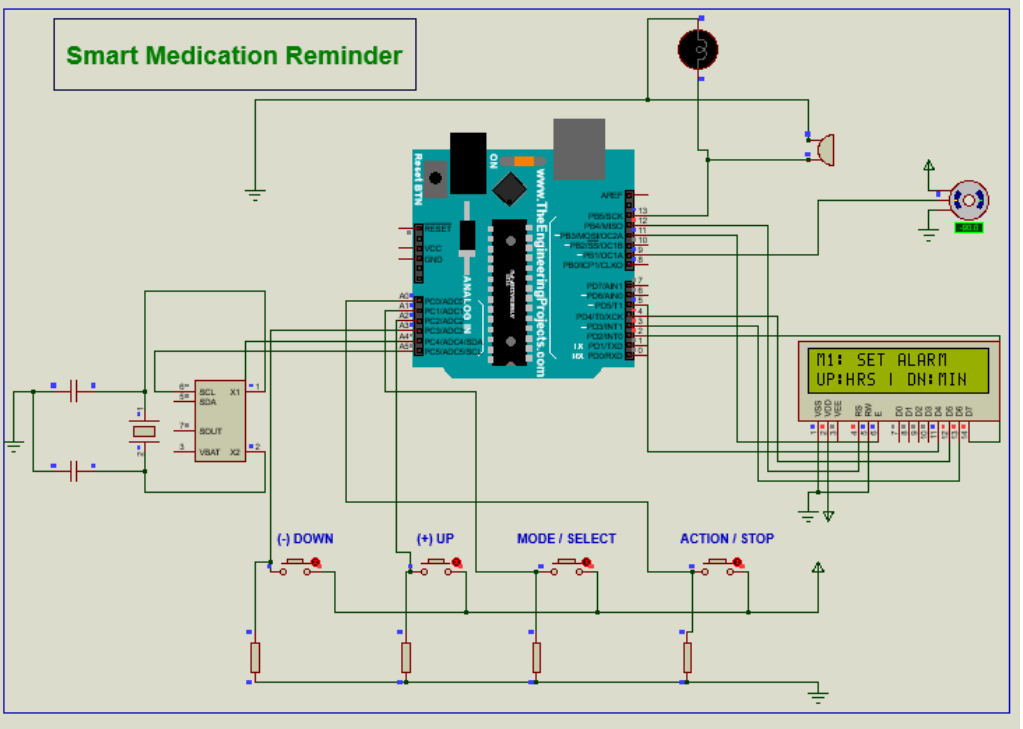

Mode 2: Set Current Time

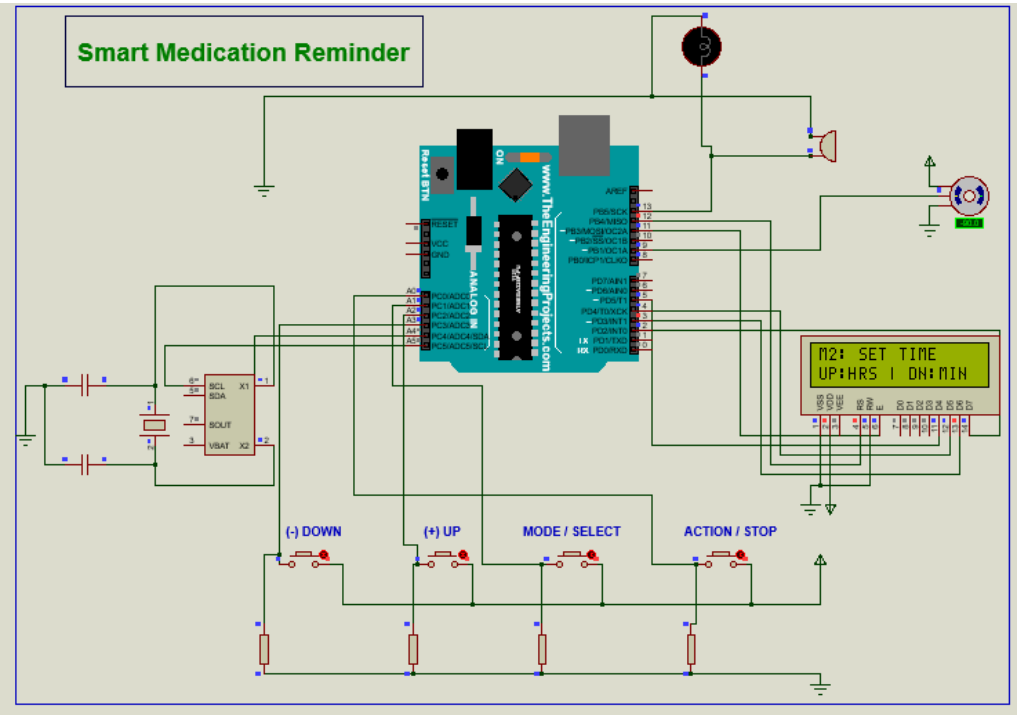

Mode 3: Ready Confirmation

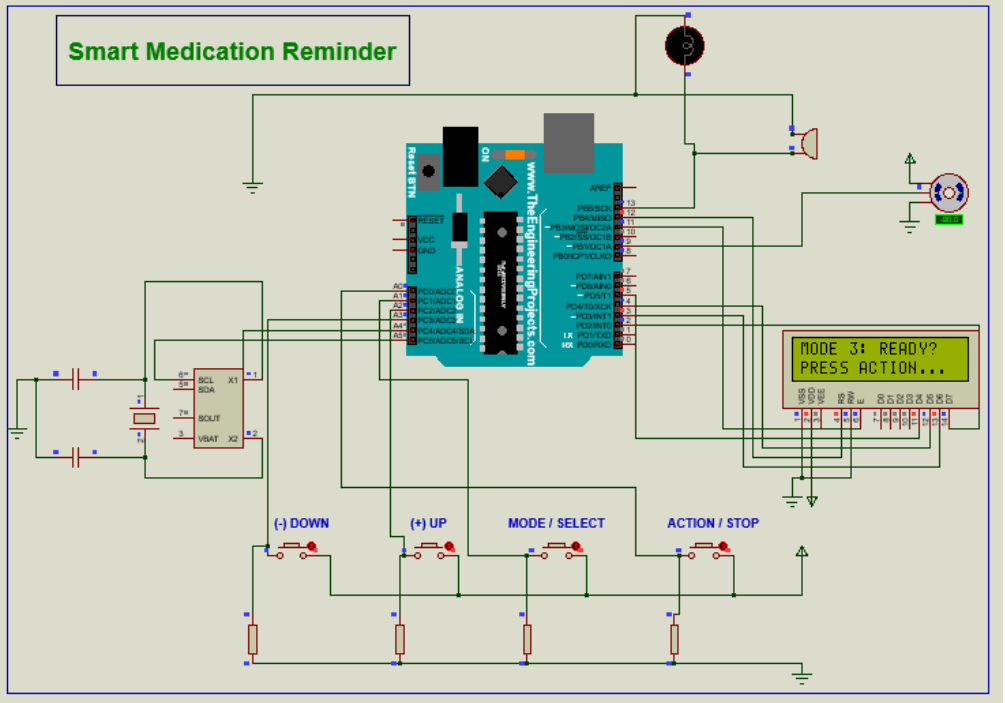

Mode 4: Active Clock & Trigger Monitoring.

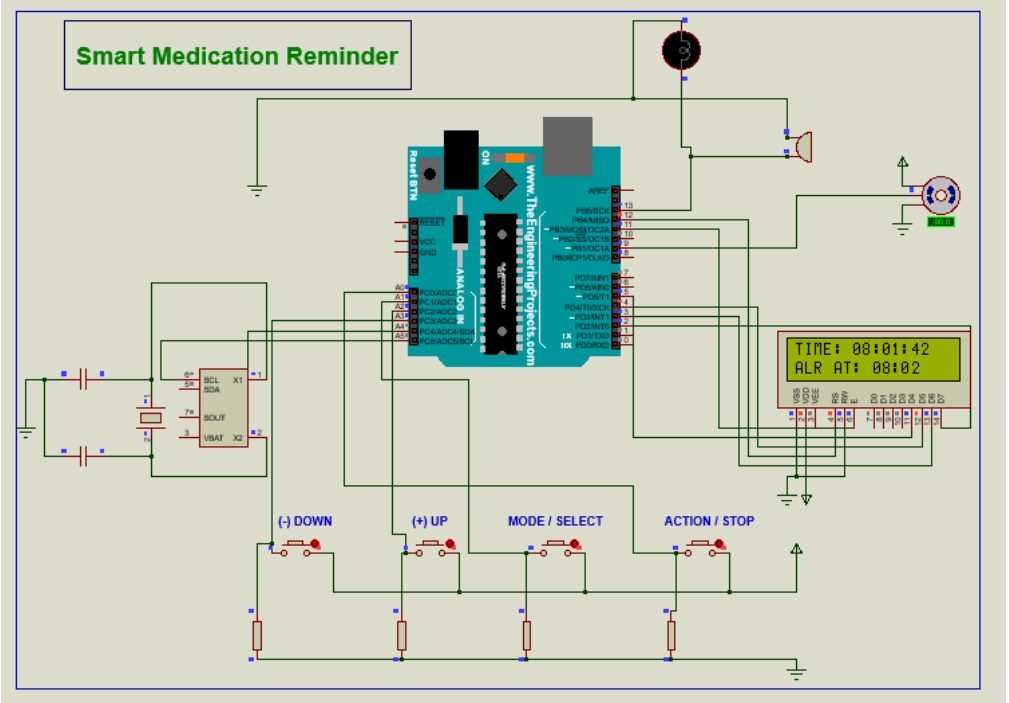

MEDICINE TIME! ALARM & LED ACTIVE

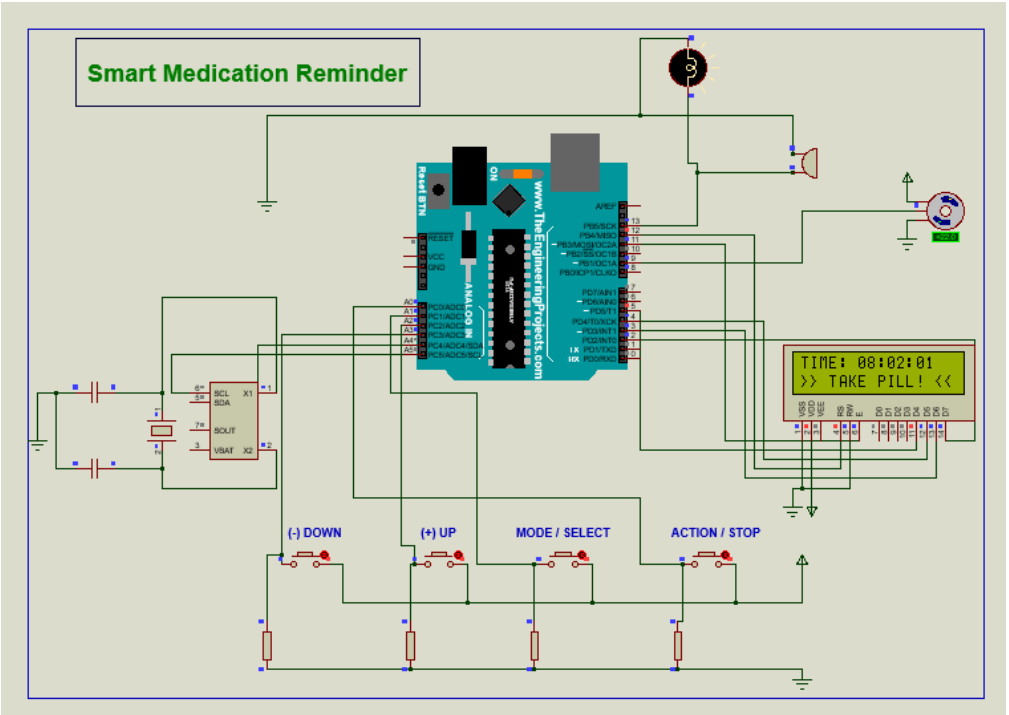

User Acknowledgment

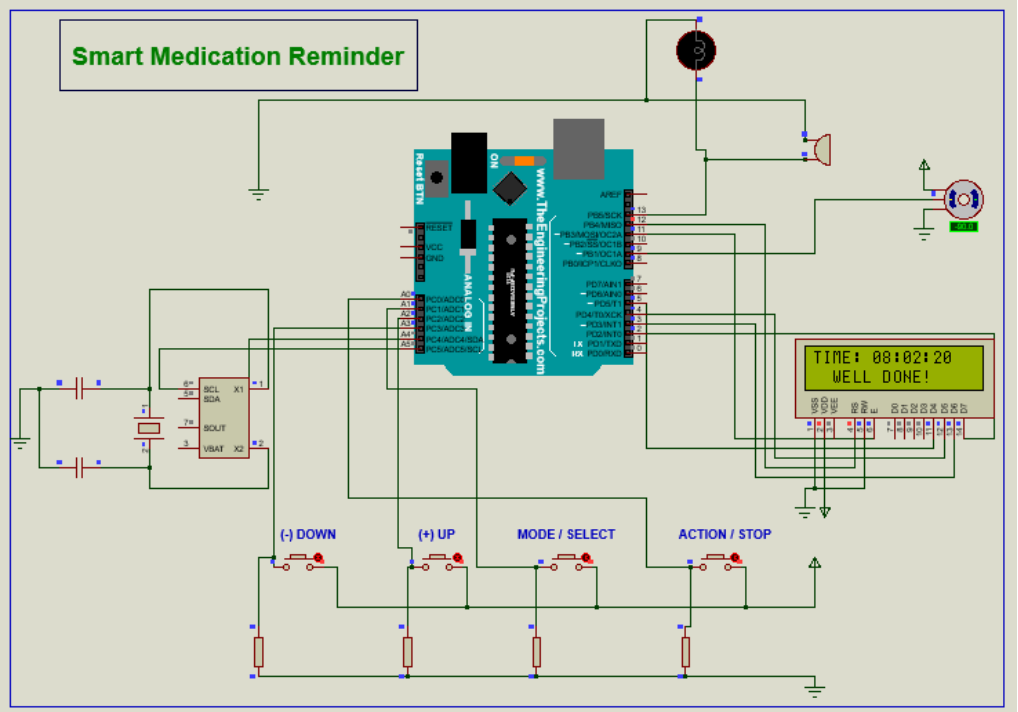

7.Conclusion

The Smart Medicine Dispenser & Reminder project successfully demonstrates how embedded systems can solve real-world healthcare challenges. By integrating an **Arduino** Uno with an **LCD**, **Servo motor**, and **RTC logic**, I have created a reliable prototype that automates medication timing.

Key Takeaways:

- **System Stability:** Using a Finite State Machine (FSM) approach allowed the system to switch between "Setting" and "Running" modes without any lag or errors.
- **LCD Precision:** I solved the display flickering and character overlap issues by using absolute cursor positioning, ensuring the interface is clear and user-friendly.
- **Successful Actuation:** The hardware successfully synchronized the Servo motor and Bicolor LEDs to trigger exactly when the alarm time was reached.

In summary, this project proves that low-cost microcontrollers can effectively manage complex schedules. This prototype serves as a solid foundation for future medical IoT devices, aiming to improve patient independence and treatment accuracy.

----------Thank you !----------